BODY, SEAT ASM, & MOUNTING, REAR - Z26S4D92AN/AH/BN/BH (C750593)

RZR - RZR PRO S4 ULTIMATE (R01) - Z26S4D92AN/AH/BN/BH

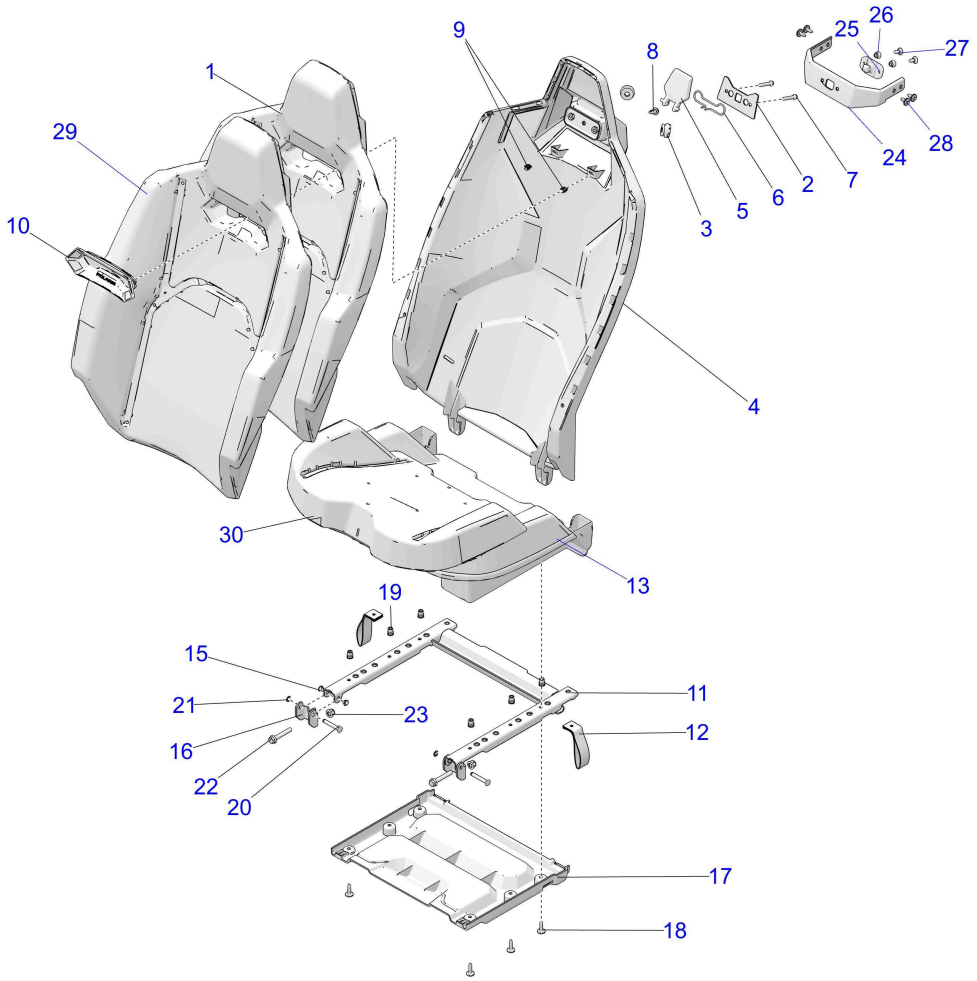

© 2024 Polaris Industries Inc.

C750593

Reference #	*Part#*	*Description*	*Quantity*
1	2639642	ASM-SEAT,BUN,BACK [INCLS. BUN]	1
1	5815572	BUN-SEAT,REAR,BACK	1
2	5273996-329	COVER-LATCH,SEAT,MP,ECOAT	1
3	5413428	GROMMET-LATCH	2
4	5465065	SEAT-SHELL,BACK	1
5	5465066	LATCH-HANDLE	1
6	7081466	SPRING, LATCH, SEAT	1
7	7518578	SCR-HXFL-M6X1.0X35 8.8 ZY3	2
8	7661855	RIVET-TUFLOK,.315-.325X.787	1
9	5456313	CLIP-TRIM, PLASTIC, WHITE	2
10	5465755-070	BEZEL-SEAT COVER,BLACK	1
11	1024845-458	WELD-SEAT FRAME,REAR,FLIP,BLK	1
12	2689264	STRAP-SEAT	2
13	2639643	ASM-SEAT,BUN,BOTTOM	1
15	5266311	BUSHING-DOOR PIVOT	4
16	5267628	BRKT-SEAT FRAME,HINGE,REAR	2
17	5467185	PANEL-UNDERSEAT,REAR,FLIP	2
18	7519650	SCR-TXTH-M6X1.0X25 ZFB	6

19	7547789	NUT-RIVNUT,M6X1.00	6
20	7662356	PIN-DOOR HINGE	2
21	7710466	E-CLIP,M6, DIN 6799	2
22	7517793	SCR-M8X1.25X50 HX/FL-Y	2
23	7547332	NUT- M8X1.25, FLG, NYLOC-OLIVE D	2
24	5273997-458	BRKT-LATCH,SEAT,MP,BLK	2
25	5466348	LATCH-DOWEL	2
26	7520194	SCR-CARRIAGE,M6X16	4
27	7547475	NUT-M6,HX/FL,NYLOC ZPB	4
28	7518936	SCR-M6X1X16 TR/TX-M	4
29	2693694	ASM-COVER-SEAT,BACK,TTM,BLUE S	2
30	2693700	ASM-COVER-SEAT,BTM,TTM,BLUE ST	2

Copyright 1996-2026 Polaris Industries U.S.A All rights reserved.